FIXED-BIAS

JFET DC BIASING

prepared by:

Gyro A. Madrona

Electronics Engineer

GRADING SYSTEM

FINAL GRADE

30%

PRELIM

30%

MIDTERM

40%

ENDTERM

TERM GRADE

50%

WEEKLY

50%

EXAM

100%

LABORTORY

PENALTY

0

ABSENT

3

45-min LATE

5 max

15-min LATE

TOPIC OUTLINE

Fixed-Bias

- Gate-to-Source Loop
- Drain-to-Source Loop
- Transconductance Curve

FIXED-BIAS

GENERAL RELATIONSHIPS

$$i_D = i_{DSS}\left(1 - \frac{v_{GS}}{v_P}\right)^2$$

$$i_G \cong 0$$

$$i_D = i_S$$

FIXED-BIAS CONFIGURATION

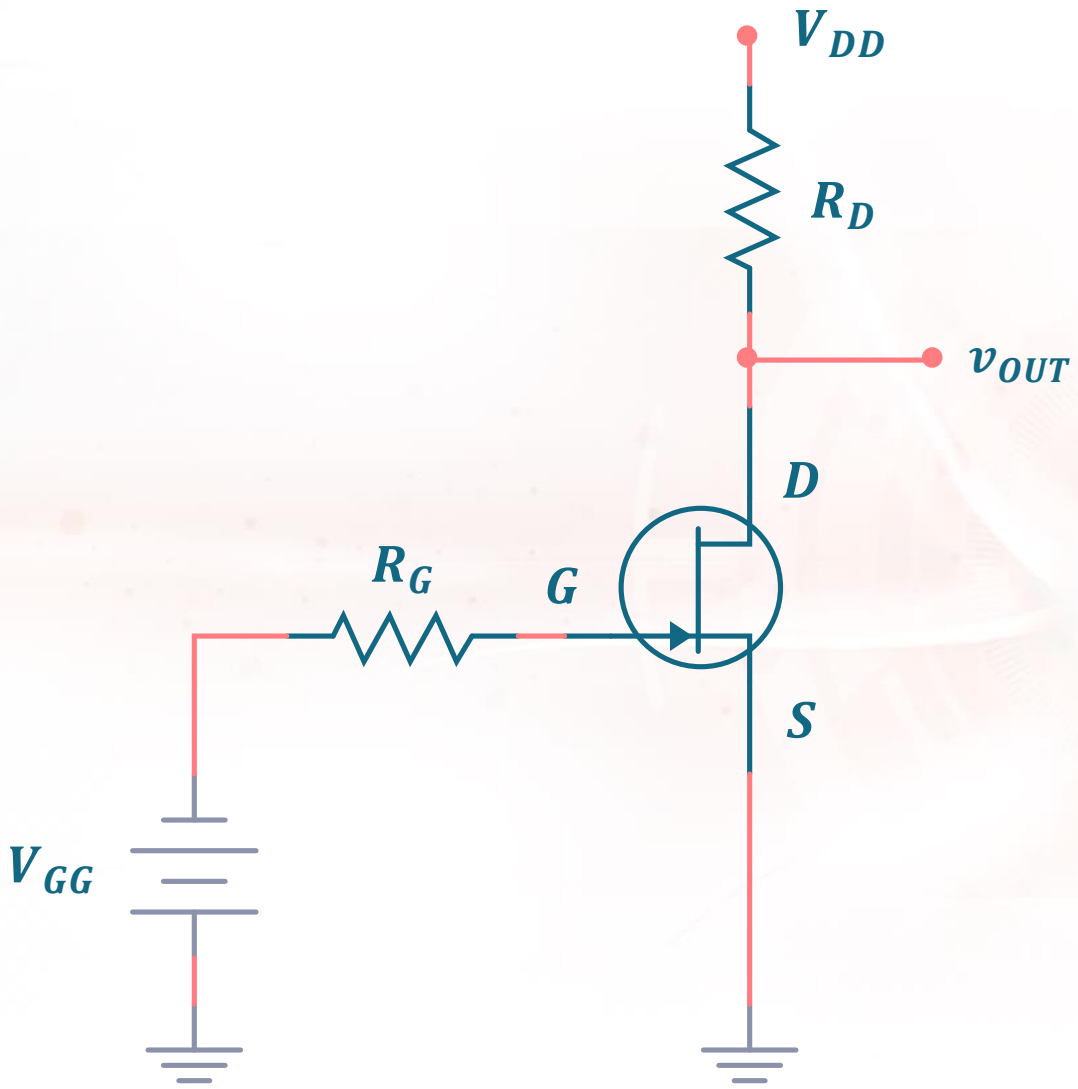

GATE-TO-SOURCE

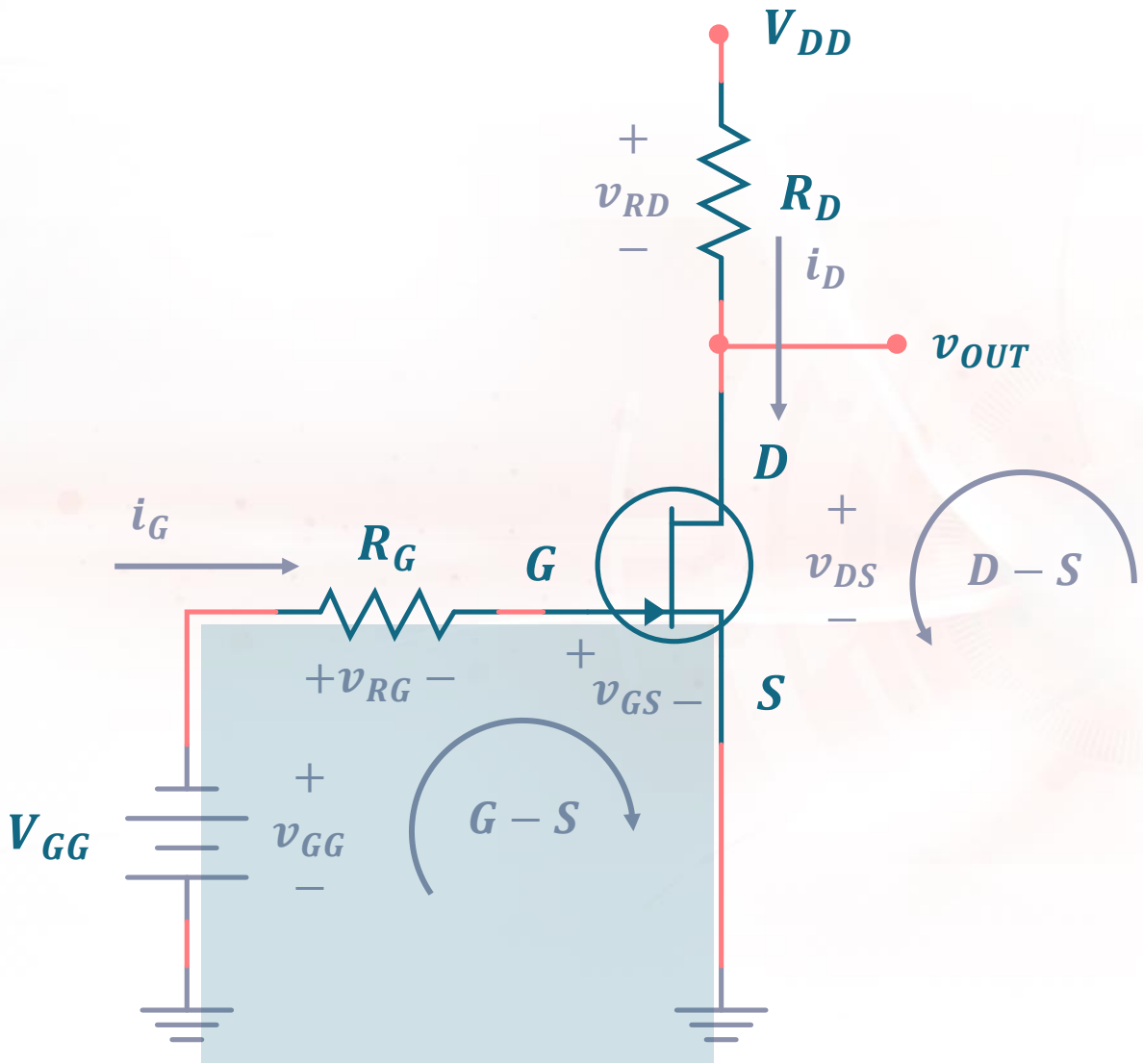

KVL @ G-S

$$-v_{GG} + v_{RG} + v_{GS} = 0$$

$$v_{GS} = v_{GG} - v_{RG}$$

$$v_{GS} = v_{GG} - \cancelto{0}{i_G R_G}$$

$$\boxed{v_{GS} = -V_{GG}}$$

DRAIN-TO-SOURCE

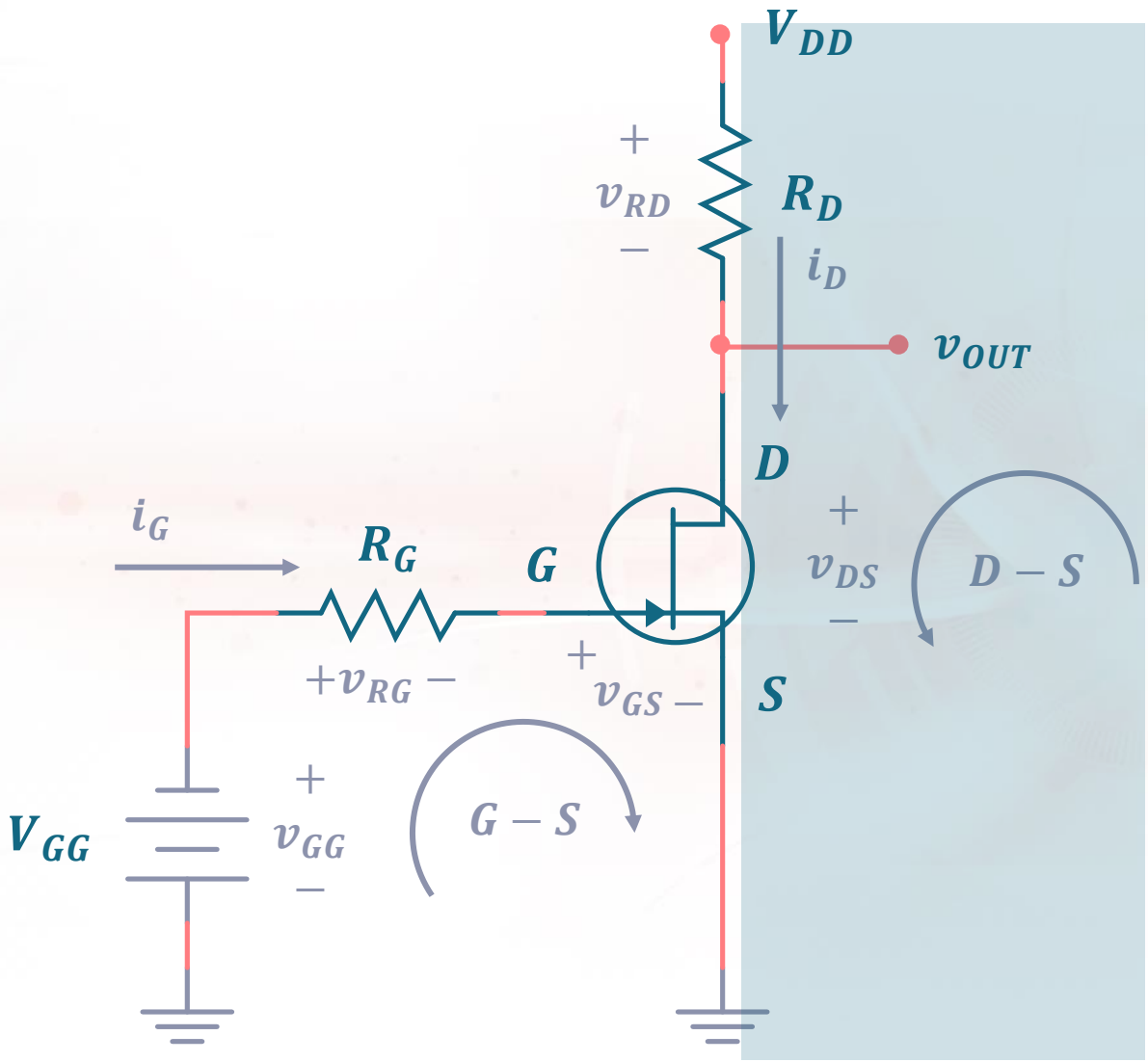

KVL @ D-S

$$-v_{DD} + v_{RD} + v_{DS} = 0$$

$$v_{DS} = v_{DD} - v_{RD}$$

$$\boxed{v_{DS} = v_{DD} - i_D R_D}$$

EXERCISE

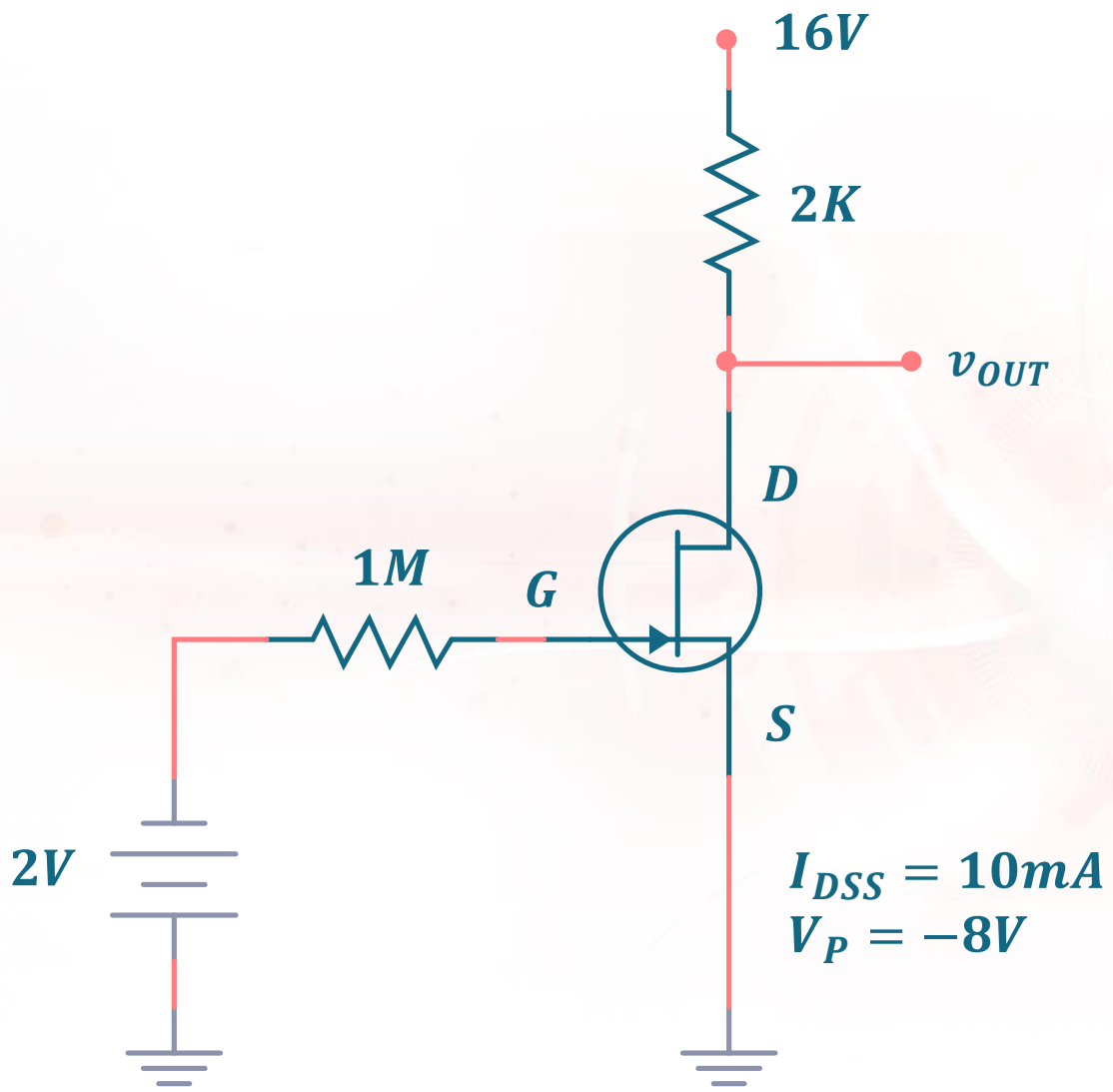

For the given network, determine the following :

v_{GSQ}

v_S

v_G

i_{DQ}

v_{DS}

v_D

and **sketch** the transconductance curve.

EXERCISE

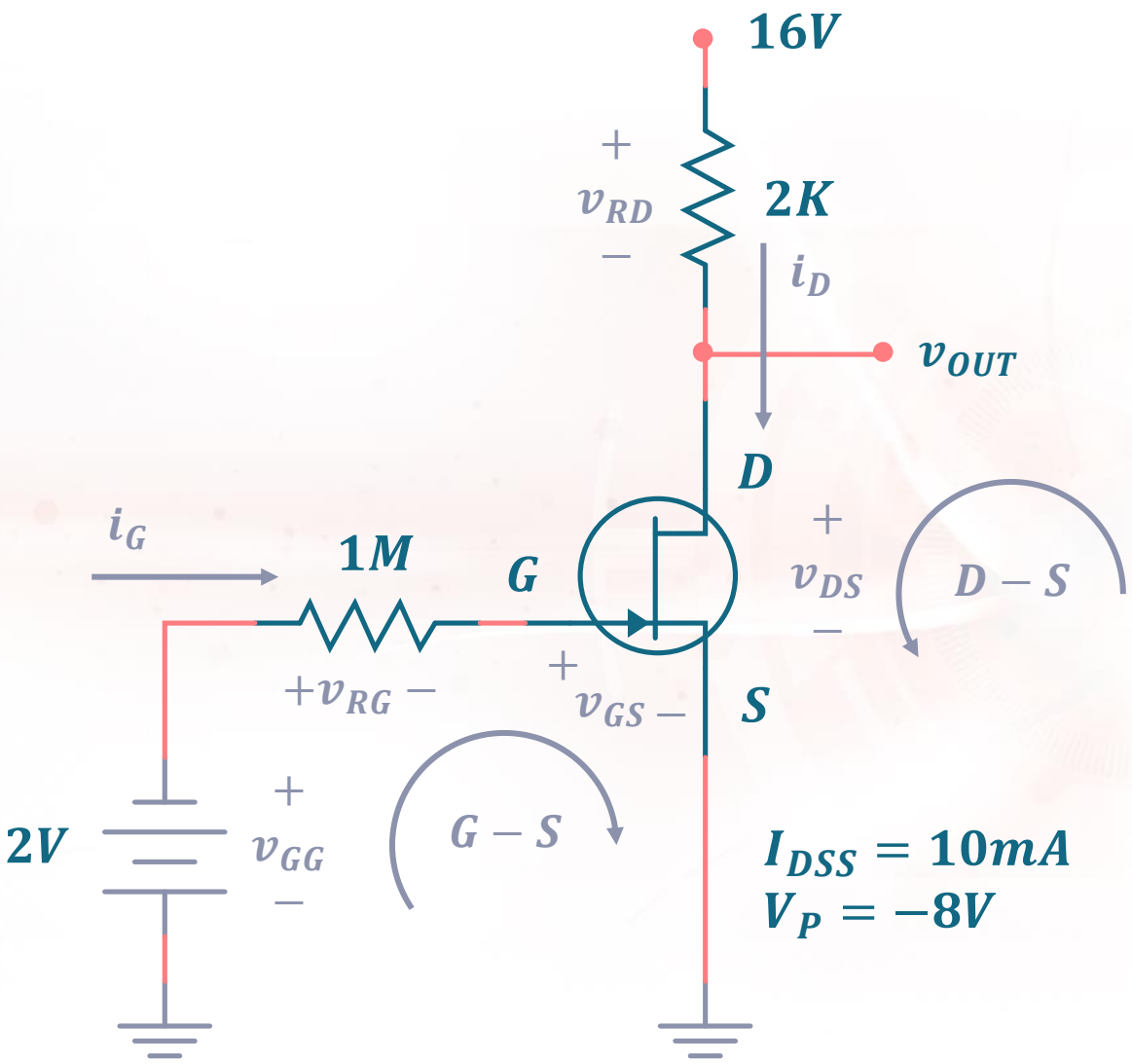

For the given network, determine the following :

v_{GSQ}

v_S

v_G

i_{DQ}

v_{DS}

v_D

and **sketch** the transconductance curve.

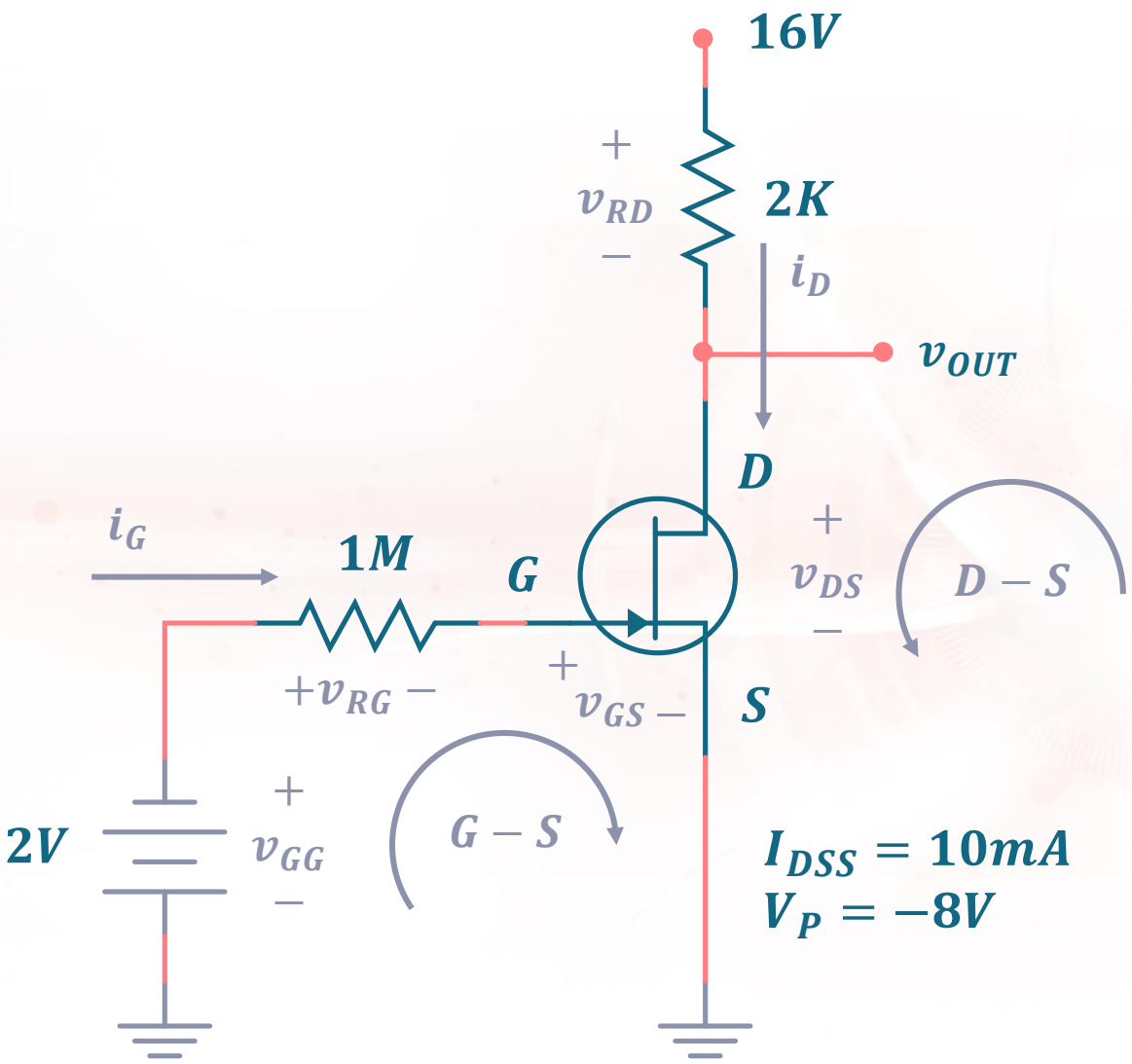

$I_{DSS} = 10mA$
$V_P = -8V$

KVL @ G-S

$$-v_{GG} + v_{RG} + v_{GS} = 0$$

$$v_{GS} = v_{GG} - \cancel{i_G R_G}^{\,0}$$

$$\boxed{v_{GSQ} = -2\ V}$$

ans

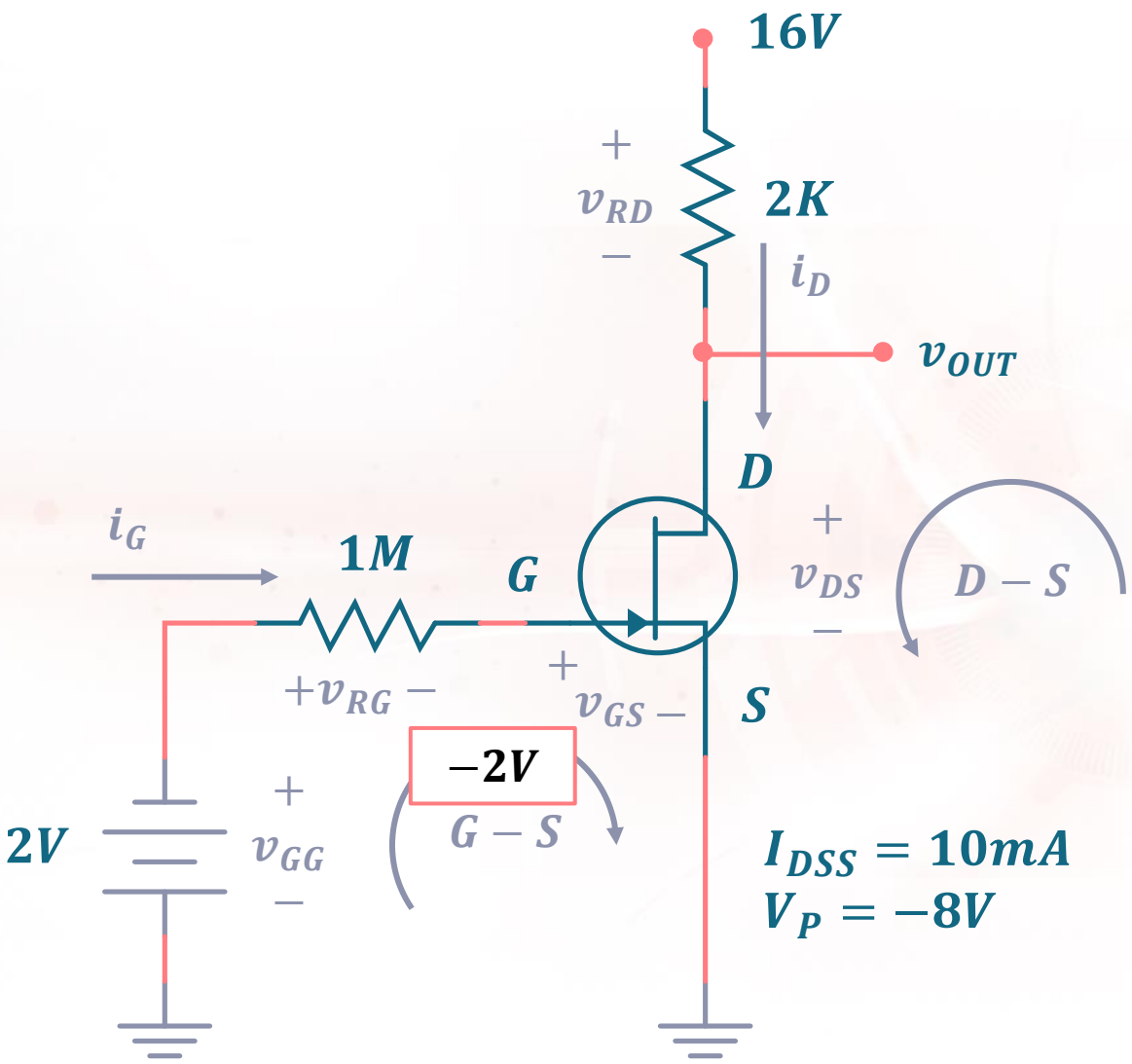

$I_{DSS} = 10mA$
$V_P = -8V$

Node Analysis Method

$$v_{GS} = v_G - v_S$$

$$-2 = v_G - 0$$

$$\boxed{v_G = -2\ V}$$

ans

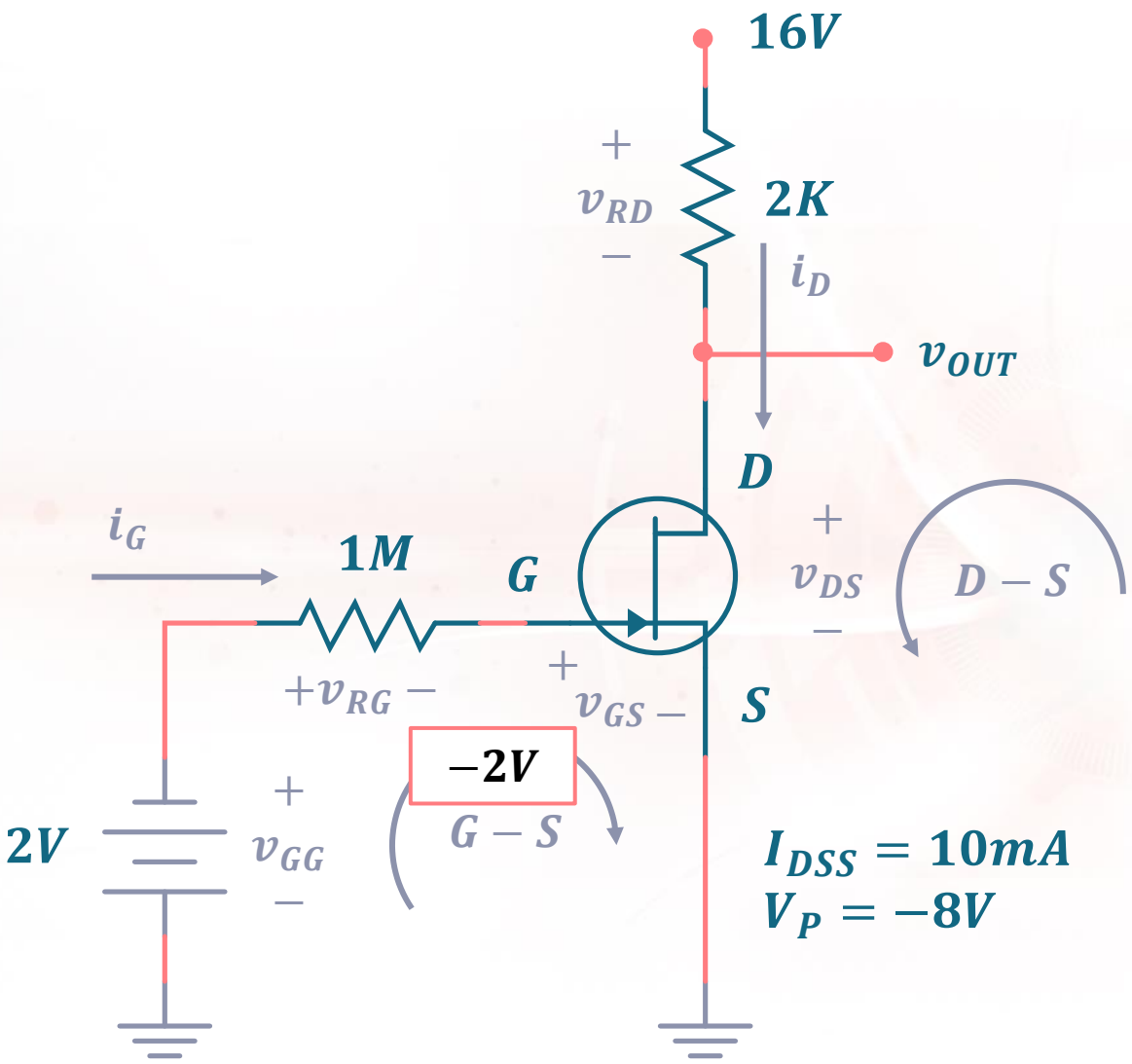

$I_{DSS} = 10mA$
$V_P = -8V$

Shockley's Equation

$$i_D = i_{DSS}\left(1 - \frac{v_{GS}}{v_P}\right)^2$$

$$i_D = 10mA\left(1 - \frac{-2}{-8}\right)^2$$

$$\boxed{i_{DQ} = 5.63\ mA}$$

ans

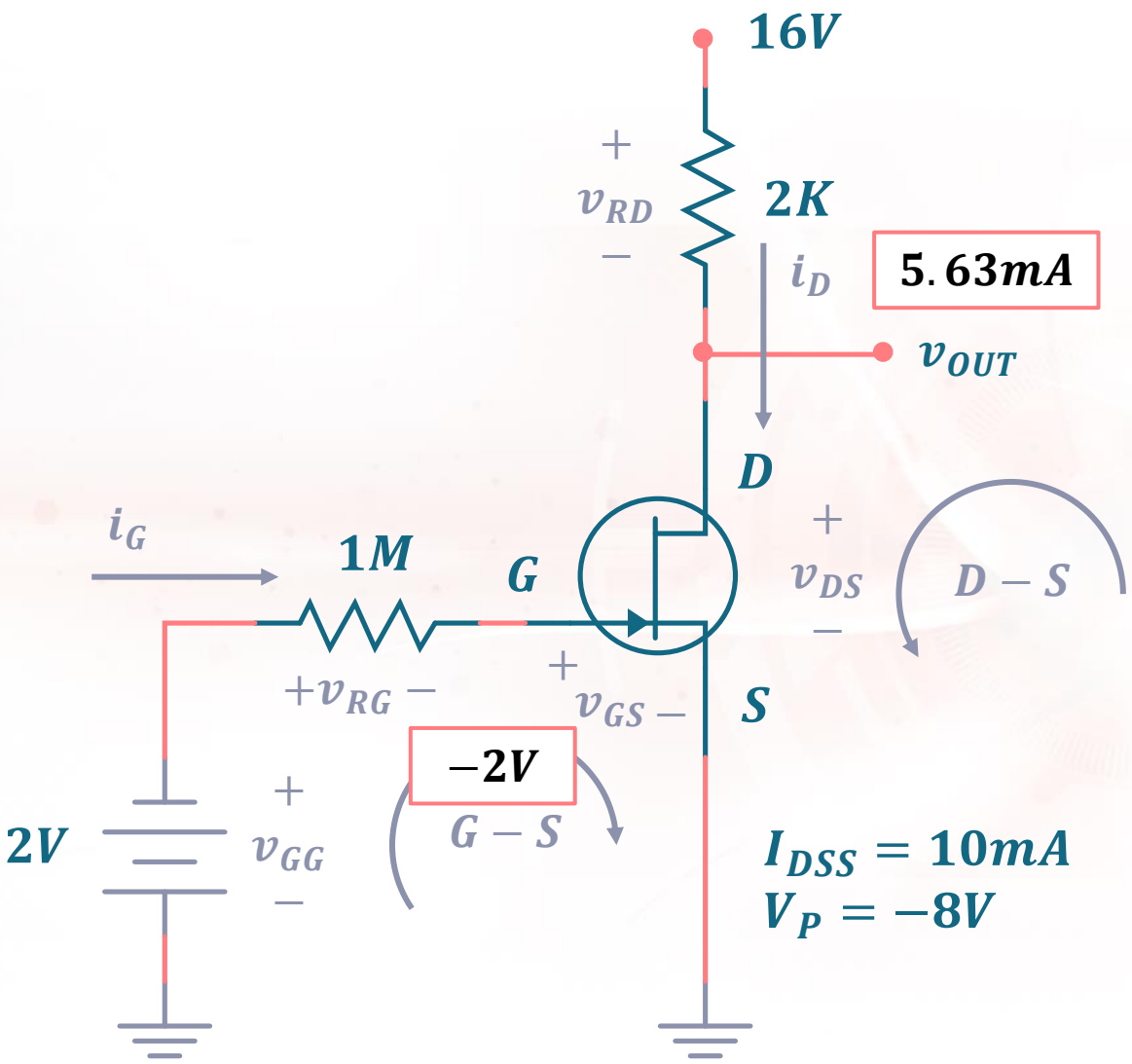

$I_{DSS} = 10mA$
$V_P = -8V$

KVL @ D-S

$$-v_{DD} + v_{RD} + v_{DS} = 0$$

$$v_{DS} = v_{DD} - v_{RD}$$

$$v_{DS} = v_{DD} - i_D R_D$$

$$v_{DS} = 16 - 5.63mA(2K)$$

$$\boxed{v_{DS} = 4.74V}$$

ans

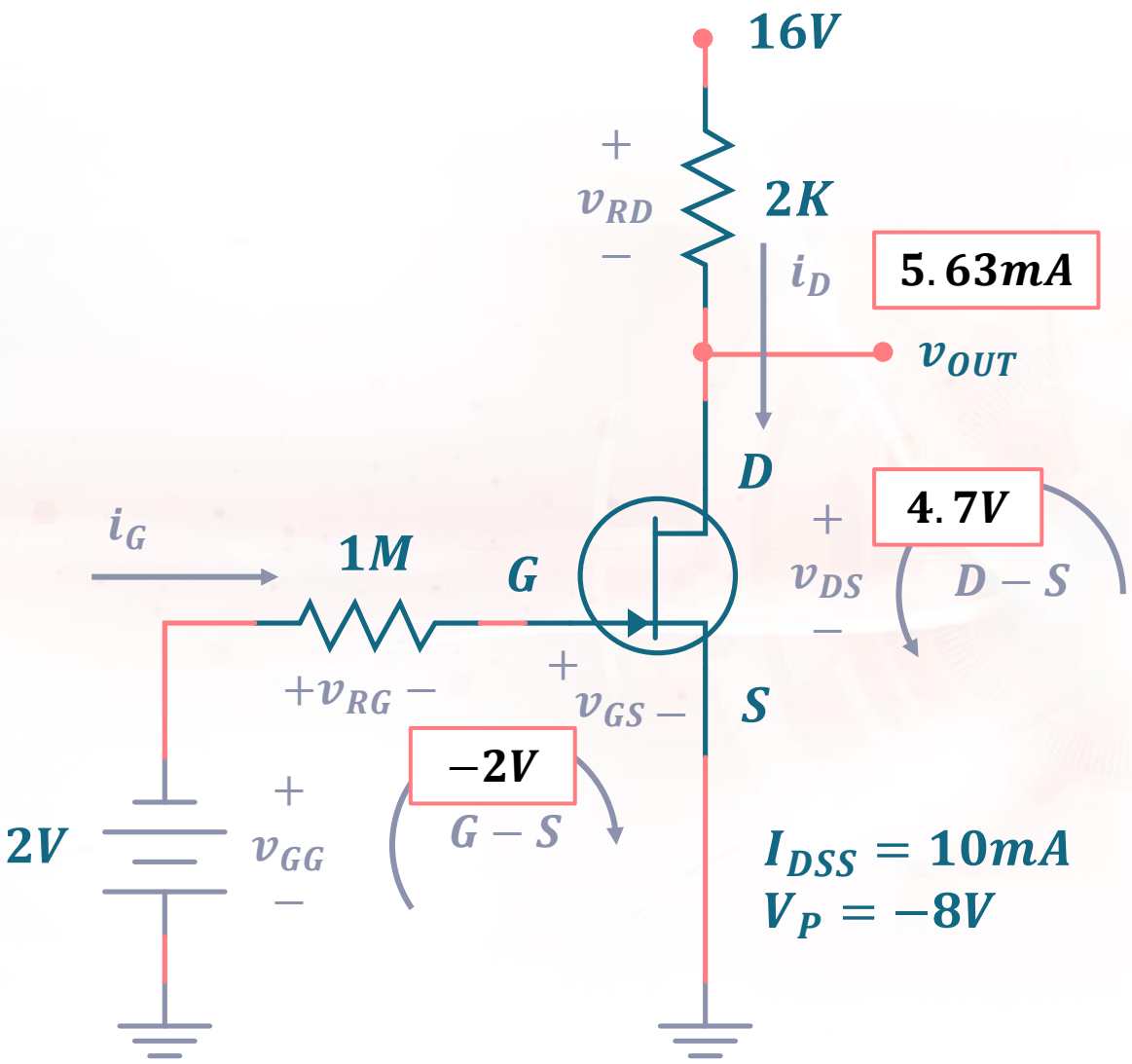

$I_{DSS} = 10mA$
$V_P = -8V$

Node Analysis Method

$$v_{DS} = v_D - v_S$$

$$4.74 = v_D - 0$$

$$\boxed{v_D = 4.74\,V}$$

ans

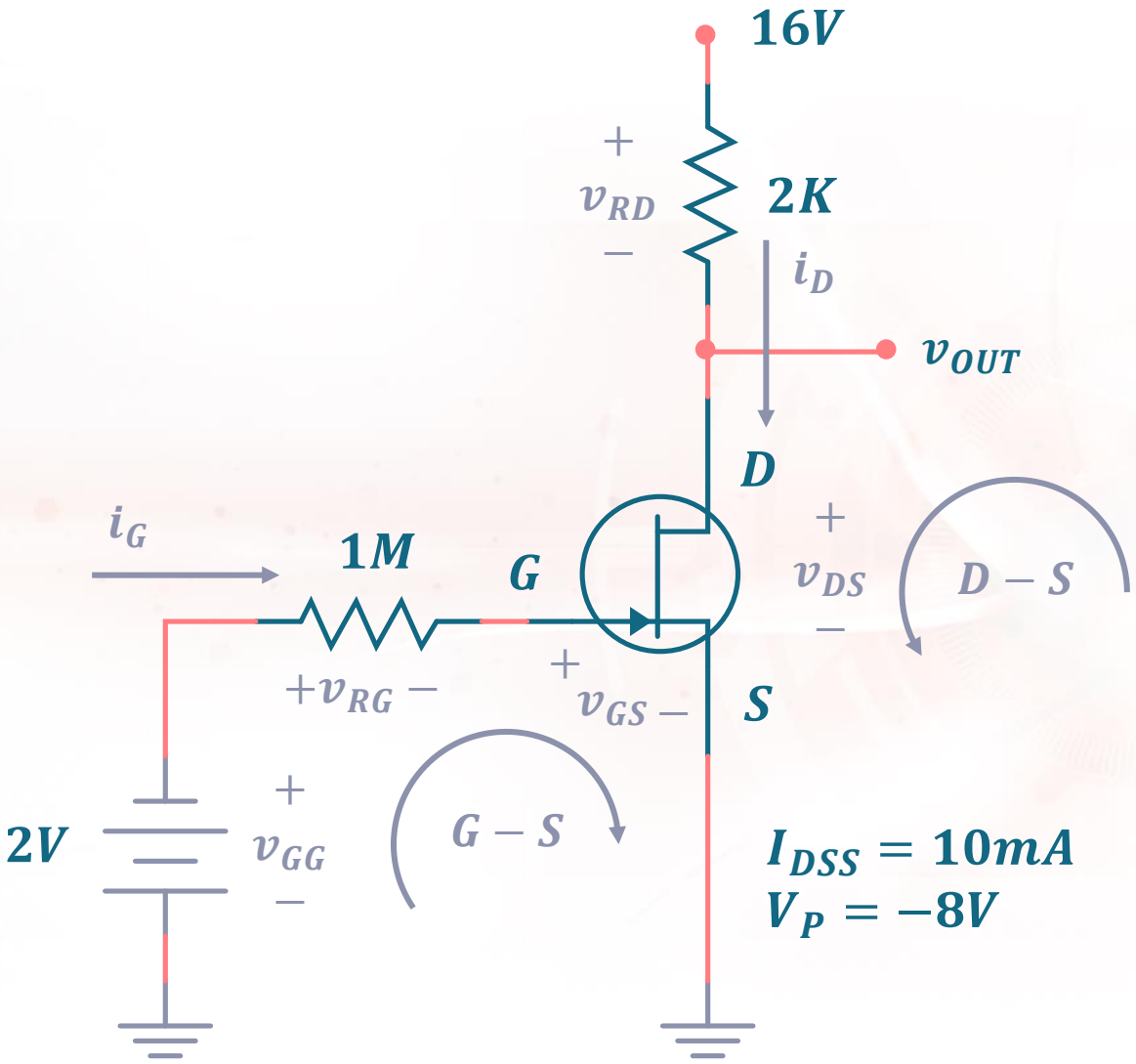

$I_{DSS} = 10mA$
$V_P = -8V$

Transconductance Curve

$$i_D = \frac{1}{4} i_{DSS}\Big|_{v_{GS}=0.5v_P}$$

$$i_D = \frac{1}{4}(10mA)\Big|_{v_{GS}=-4\,V}$$

$$\boxed{i_D = 2.5\,mA\Big|_{v_{GS}=-4\,V}}$$

ans

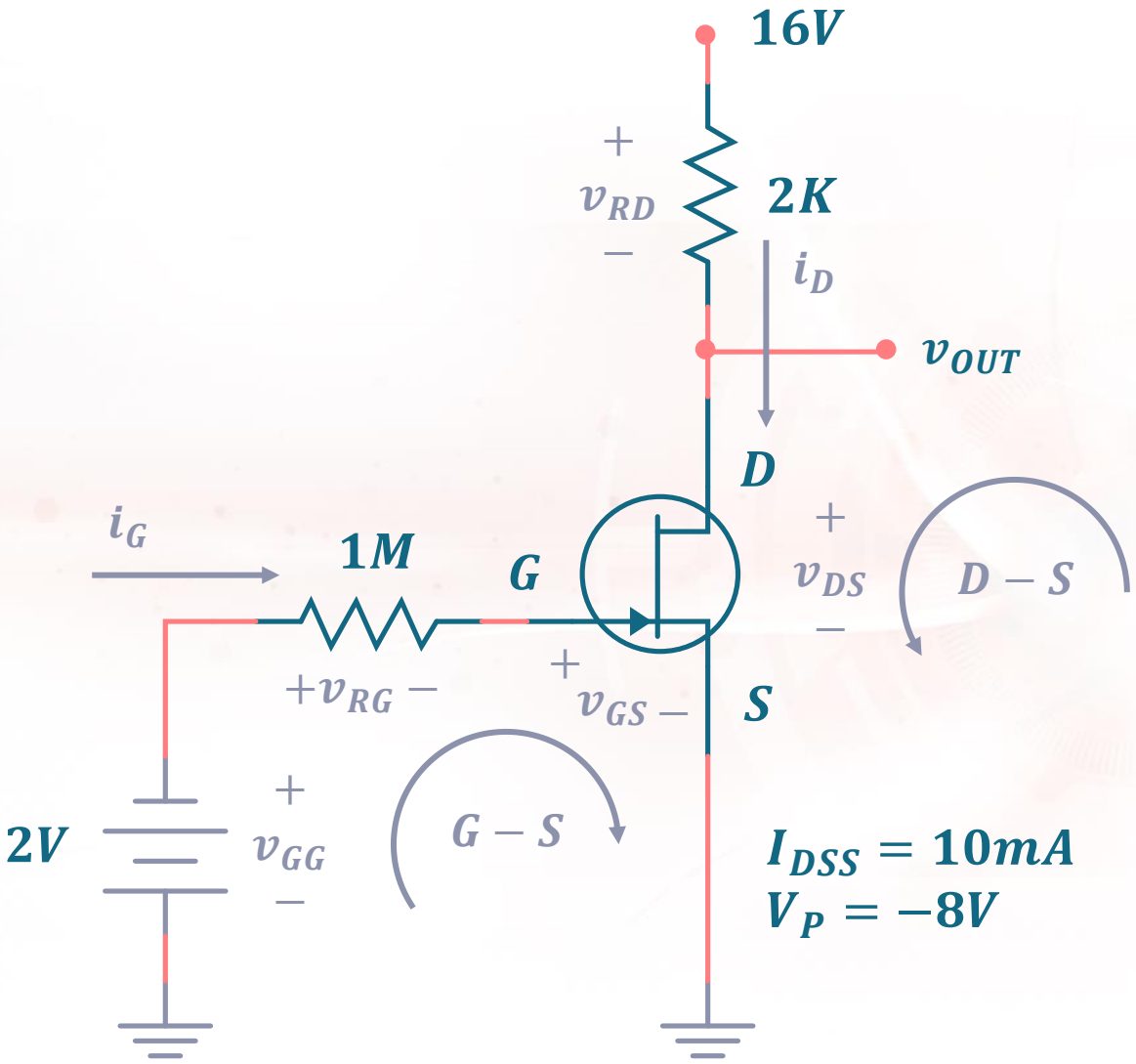

Transconductance Curve

$$v_{GS} = 0.3v_P\Big|_{i_d=0.5i_{DSS}}$$

$$v_{GS} = 0.3(-8)\Big|_{i_D=5\ mA}$$

$$\boxed{v_{GS} = -2.4\ V\Big|_{i_D=5\ mA}}$$

ans

TRANSCONDUCTANCE CURVE

$i_D = 2.5\ mA\Big|_{v_{GS}=-4\ V}$

$v_{GS} = -2.4\ V\Big|_{i_D=5\ mA}$

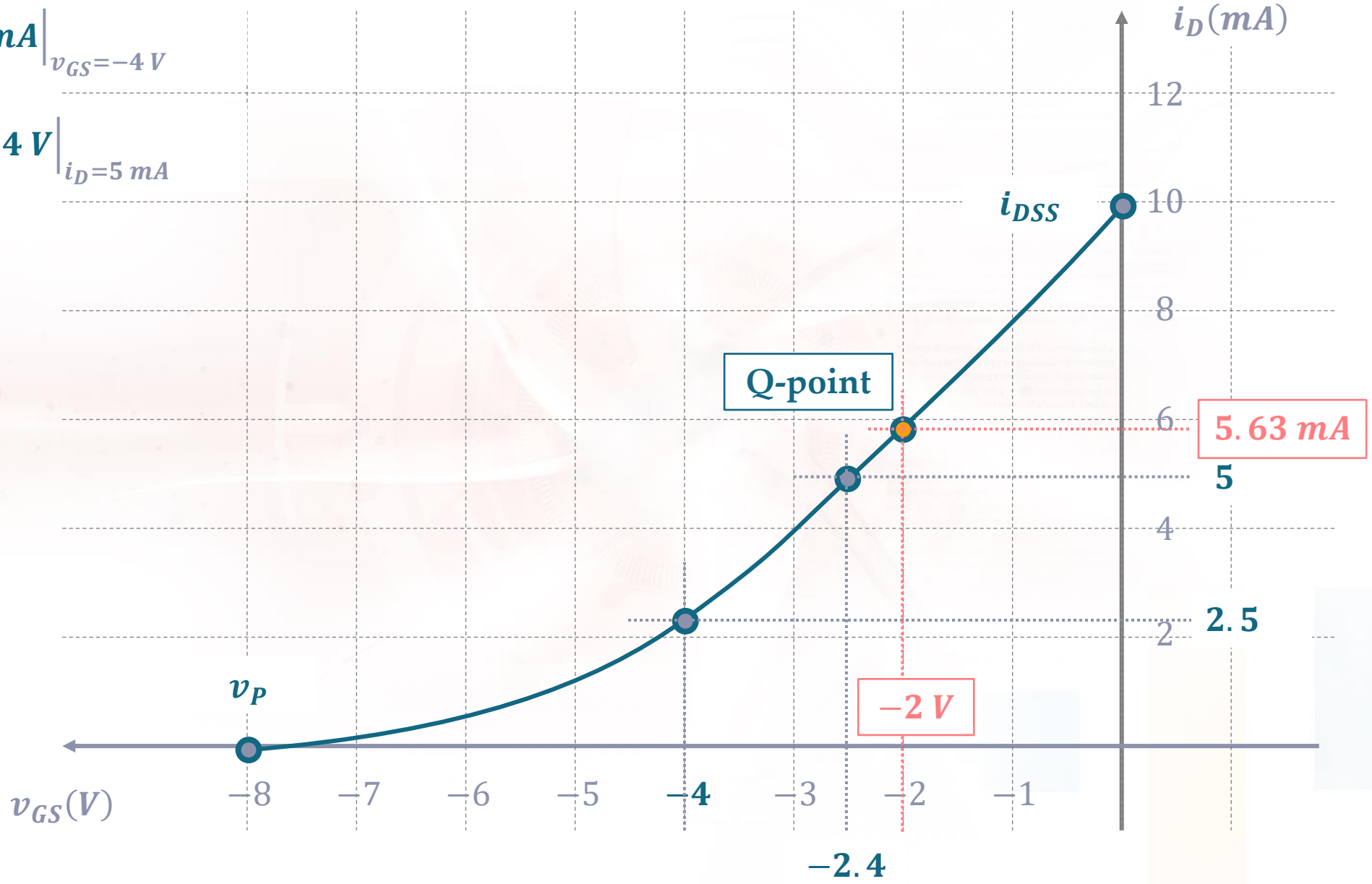

LABORATORY